ResearchGate

See discussions, stats, and author profiles for this publication at: https://www.researchgate.net/publication/333383272

A Comparative Study of Recent Non-traditional Methods for Mechanical Design Optimization

Article *in* Archives of Computational Methods in Engineering · May 2019

DOI: 10.1007/s11831-019-09343-x

CITATIONS
0

READS
490

3 authors, including:

Hammoudi Abderazek
Ferhat Abbas University of Setif
11 PUBLICATIONS **33** CITATIONS

SEE PROFILE

Seyedali Mirjalili
Torrens University Australia
165 PUBLICATIONS **8,399** CITATIONS

SEE PROFILE

Some of the authors of this publication are also working on these related projects:

Project

Meta-Heuristic Approaches for tackling data-mining tasks View project

Project

Optimization of vehicle engine components using Whale Optimization Algorithm, Sine Cosine Algorithm (SCA), Ant Lion Optimizer(ALO), Grey Wolf Optimizer (GWO), Water Cycle Optimizer (GWO) View project

All content following this page was uploaded by Ali Riza Yildiz on 27 May 2019.

The user has requested enhancement of the downloaded file.

Archives of Computational Methods in Engineering
https://doi.org/10.1007/s11831-019-09343-x

ORIGINAL PAPER

A Comparative Study of Recent Non-traditional Methods for Mechanical Design Optimization

Ali Riza Yildiz[1] · Hammoudi Abderazek[2] · Seyedali Mirjalili[3]

Received: 24 January 2019 / Accepted: 4 May 2019
© CIMNE, Barcelona, Spain 2019

Abstract

Solving practical mechanical problems is considered as a real challenge for evaluating the efficiency of newly developed algorithms. The present article introduces a comparative study on the application of ten recent meta-heuristic approaches to optimize the design of six mechanical engineering optimization problems. The algorithms are: the artificial bee colony (ABC), particle swarm optimization (PSO) algorithm, moth-flame optimization (MFO), ant lion optimizer (ALO), water cycle algorithm (WCA), evaporation rate WCA (ER-WCA), grey wolf optimizer (GWO), mine blast algorithm (MBA), whale optimization algorithm (WOA) and salp swarm algorithm (SSA). The performances of the algorithms are tested quantitatively and qualitatively using convergence speed, solution quality, and the robustness. The experimental results on the six mechanical problems demonstrate the efficiency and the ability of the algorithms used in this article.

1 Introduction

The main objective of a mechanical engineer during the design procedure of a machine element is the search for the best compromise between both economic and technological imperatives. The mechanical design optimization problems involve multiple objectives and mixed variables, in addition to several nonlinear constraints on kinematic, geometric conditions and materials resistance. During the three last decades, several mathematical programming algorithms have been developed to solve problems in various engineering and industrial applications. However, most of these methods always require the knowledge of the gradients of the objective function and constraints [5]. In the majority of cases, the classical algorithms are not able to find the global optimal solutions because usually terminate when the gradient of the function is very close to zero, and this can happen both in case of local and global solutions [43, 46].

Unlike the deterministic methods, metaheuristic approaches do not require the gradient information of the optimization problem to achieve the global solution [43]. These algorithms can be broadly classified into three major categories: evolutionary algorithms (EAs), physical algorithms and swarm-based methods. The EAs mimic the process of natural evolutionary principles [7] in order to develop search and optimization techniques. In this class of methods, the most well-known EAs are genetic algorithm (GA) [24], genetic programming (GP) [33], differential evolution (DE) [55], evolution strategy (ES) [4], and biogeography-based optimizer (BBO) [54].

The second group includes the algorithms that inspired by a physical process, where Monte Carlo [16] and the simulated annealing (SA) [32] can be considered as the first two developed approaches in this category. Later on, other physics-based techniques are developed such as big-bang big-crunch (BBBC) [12], small-world optimization algorithm (SWOA) [11], central force optimization (CFO) [14], gravitational search algorithm (GSA) [45], charged system search (CSS) [29], artificial chemical reaction optimization algorithm (ACROA) [3], galaxy-based search algorithm (GBSA) [52], colliding bodies optimization (CBO) [28], black hole (BH) [21], ray optimization (RO) algorithm [27], and curved space optimization (CSO) [40].

✉ Ali Riza Yildiz
aliriza@uludag.edu.tr

[1] Department of Automotive Engineering, Bursa Uludağ University, Görükle, Bursa, Turkey

[2] Applied Precision Mechanics Laboratory, Institute of Optics and Precision Mechanics, Setif -1- University, Setif, Algeria

[3] School of Information and Communication Technology, Griffith University, Nathan Campus, Brisbane, QLD 4111, Australia

Published online: 25 May 2019

The third class of metaheuristics includes swarm-based algorithms that mimic the collective behavior of social creatures [9]. Among the most famous methods in this category the particle swarm optimization (PSO) [30], ant colony optimization (ACO) [10], wolf pack search algorithm [58], cuckoo search (CS) [57], dolphin partner optimization (DPO) [53], bat-inspired algorithm (BA) [59] and hunting search (HUS) [41] can be found. Furthermore, other swarm intelligence techniques are developed recently, such as dragonfly algorithm (DA) [36] and whale optimization algorithm (WOA) [36, 38]. In recent years several metaheuristics has been successfully used for solving different optimization problems in various areas and real industrial cases such as mechanical precision engineering [1, 2, 20], machining applications [47–63], automotive industries [26, 31, 42, 60, 66], structural design optimization [22, 23, 64, 65], and so on.

Despite the wide application of the meta-heuristic approaches in numerous fields of engineering, their applications for mechanical design optimization problems remains relatively inadequate. For this purpose, the main contribution of this paper is to introduce the application of ten recent meta-heuristic algorithms for solving six challenging mechanical problems of mixed variables type. The problems are the coupling with a bolted rim, car side impact, rolling element bearing, step-cone pulley, belleville spring, and speed reducer problem. Among the used algorithms: the artificial bee colony (ABC) [25], PSO [30] algorithm, moth-flame optimization (MFO), ant lion optimizer (ALO), water cycle algorithm (WCA), evaporation rate WCA (ER-WCA), grey wolf optimizer (GWO), mine blast algorithm (MBA), whale optimization algorithm (WOA) [36] and salp swarm algorithm (SSA) [37]. The performances of each used algorithm are validated in terms of convergence speed, solution quality, and robustness. The rest of the paper is organized as follows:

Section 2 provides a summary of the optimization algorithms employed in this work to solve the challenging problems. The problems and experimental results are presented and discussed in Sect. 3. Finally, Sect. 4 provides the conclusions and future works.

2 Optimization Algorithms

In this section, each algorithm employed in this study is presented briefly. Only the main phases are discussed, and the interested readers by the algorithms can find all the necessary details in the cited publications.

2.1 Artificial bee colony

The ABC algorithm has been introduced by Karaboga and Basturk [25] to optimize mathematical problems. The method mimics the intelligent foraging behavior of a honey bee swarms. ABC works based on three principal phases accordingly: food sources, employed foragers, and unemployed foragers.

2.2 Particle Swarm Optimization

The second algorithm employed in this study is the PSO algorithm. This approach has been originally created and formulated by Kennedy and Eberhart [30] based on the mathematical modeling of the social behaviors of fish or birds. The algorithm belongs to the swarm-based methods and begins with a random set of agents (solutions) called particles. Each particle is characterized by two vectors including velocity and position [31].

2.3 Moth-Flame Optimization

The MFO is a novel population-based meta-heuristic algorithm proposed by Mirjalili [34]. The MFO approach is based on the simulation of the special navigation technique of moths in the night. Similarly to other meta-heuristics, it starts the optimization procedure by creating a set of random candidate solutions.

The moth used a mechanism called as transverse orientation for navigation when traveling during night time. In the MFO algorithm, candidate solutions are assumed to be moths and variables of a problem are assumed to be positions of moths in the search space [67].

2.4 Ant Lion Optimizer

ALO is a new nature-inspired intelligent technique, which is recently developed by Mirjalili [35]. The ALO algorithm mimics the hunting technique of ant lions in nature. The ant lions hide at the bottom of conical pits in the sand and wait for their prey to fall in. Then they throw sand towards prey so that the prey is unable to escape and is consumed, after which the pit is rebuilt for catching other ants.

2.5 Grey Wolf Optimizer

The GWO is a population-based optimization algorithm, which is inspired by both the leadership skills as well as hunting behavior of grey wolves in nature [39]. According to the social hierarchy and the ability of each wolf in the group, the grey wolves can be categorized into four principal classes: Alpha (α), Beta (β), Delta (δ), and Omega

Table 1 Specific parameter settings of used algorithms

Algorithm	Parameter settings
ABC	$limit = NP \times n$
PSO	$w_{min} = 0.9$, $w_{max} = 0.4$; $c_1 = 2$, $c_2 = 2$
MFO	Only the common parameters (FEs and NP)
ALO	Only the common parameters (FEs and NP)
ER-WCA	$N_{sr} = 8$, $d_{max} =$ 1E−03
GWO	Only the common parameters (FEs and NP)
WCA	$N_{sr} = 8$, $d_{max} =$ 1E−03
MBA	Only the common parameters (FEs and NP)
SSA	Only the common parameters (FEs and NP)
WOA	Only the common parameters (FEs and NP)

N_{sr} is the number of rivers plus sea, d_{max} is the evaporation condition constant, w_{min}, w_{max} are respectively the min and max inertia weight 0.4, c_1 and c_2 are acceleration factors

Table 2 FEs number and the NP size for the algorithms

Problem	NP	t_{max}	FEs
Coupling with a bolted	20	250	5000
Car side impact	35	850	29,750
Rolling element	50	500	25,000
Step-cone pulley	20	750	15,000
Belleville spring	20	750	15,000
Speed reducer	25	1000	25,000

(ω). The alpha (α) wolf is the leader of the group and responsible for making the important decisions such as hunting, sleeping place, time to wake, and so on [15]. The grey wolf hunting technique involves three steps: tracking, encircling and attacking the prey.

2.6 Water Cycle Algorithm

Another meta-heuristic algorithm used in this article is the water cycle algorithm. This algorithm has been introduced for the first time in 2012 by Eskandar et al. [13] in order to optimize the constrained engineering problems. The fundamental idea of WCA approach is based on the water cycle and how rivers and streams flow downhill towards the sea in the real world. Like other population-based meta-heuristic algorithms WCA starts with multiple random solutions called the population of streams. Other steps are implemented to choose the best individual or sea such as the flow of streams to rivers or sea, evaporation and raining processes, and evaporation rate.

2.7 Evaporation Rate Water Cycle Algorithm

The ER-WCA algorithm is introduced by Sadollah et al. [49] for solving constrained and unconstrained optimization problems. It is considered as an extended version of WCA, where new concept of evaporation rate for different rivers and streams has been added. According to the authors, the ER-WCA shows a better balance between exploration and exploitation steps compared to WCA variant.

2.8 Mine Blast Algorithm

The MBA algorithm has been recently developed by Sadollah et al. [47]. This technique is successfully used to solve constrained engineering optimization problems and discrete sizing optimization of truss structures [47, 48]. The main idea of MBA procedure is based on the observation of mine bomb explosions in real situations. In Sadollah et al. [50] an improved variant of MBA (IMBA) is introduced for the optimization of truss structures.

2.9 Salp Swarm Algorithm

The salp swarm algorithm has been introduced recently by Mirjalili et al. [37] for optimizing the engineering design problems. The SSA method simulates the intelligent navigation behavior of the salps for food sources in oceans. Like other swarm-based algorithms, SSA begins the optimization process by creating a set of random candidate solutions. In the first step, the created population is divided into two groups: leader and followers. The leader is the salp at the front of the chain, whereas the rest of salps are considered as followers [37].

2.10 Whale Optimization Algorithm

The whale optimization algorithm (WOA) is a new population-based meta-heuristic algorithm. Proposed recently by Mirjalili and Lewis [38], the WOA approach is based on the simulation of the social behavior of humpback whales. The latter is considered as the biggest mammals on the whole earth. According to Mirjalili and Lewis [38] an adult whale can grow up to 30 m long and 180 *t* weight. Despite their huge size, these mammals are characterized by their intelligence as well as their sophisticated way on collective work during the hunting. In addition to the initialization step, WOA includes encircling prey, the bubble net hunting method and the search for prey.

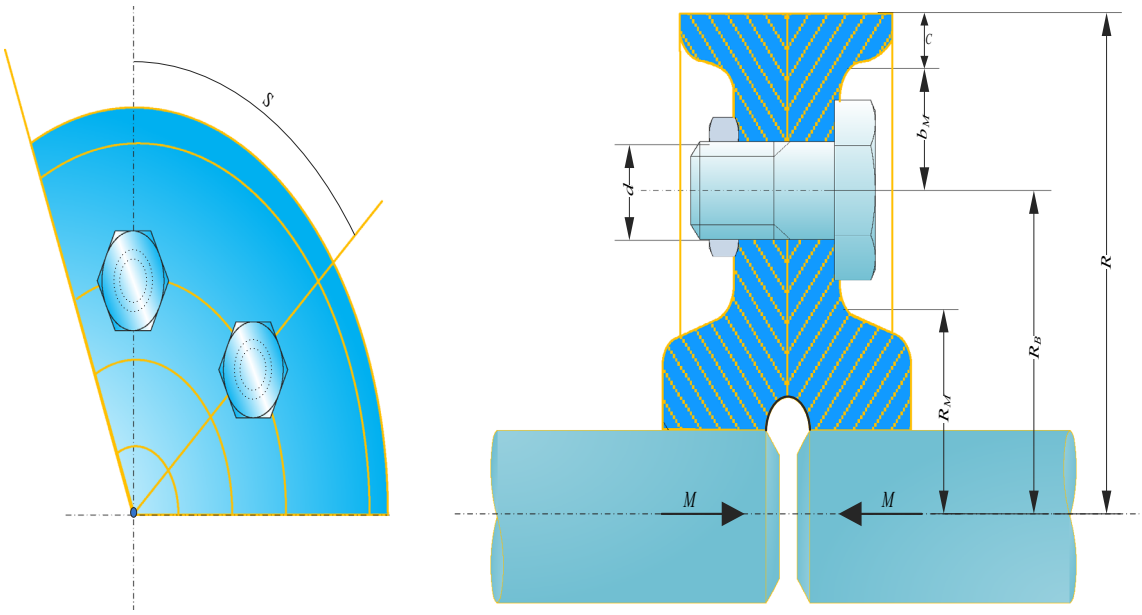

Fig. 1 Schematic view of coupling with bolted rim

Table 3 Comparison of the best optimum solution for the coupling with a bolted rim

Variables	Algorithm									
	ABC	PSO	MFO	ALO	ER-WCA	GWO	WCA	MBA	SSA	WAO
d	2.00000	2.00000	2.00000	2.00000	2.00000	2.00000	2.00000	2.00000	2.00000	2.00000
N	8.00000	8.00000	8.00000	8.00000	8.00000	8.00000	8.00000	8.00000	8.00000	8.00000
R_b	59.5000	59.5000	59.5000	59.5000	59.5000	59.5000	59.5000	59.5000	59.5000	59.5000
M	40.0000	40.0000	40.0000	40.0000	40.0000	40.0000	40.0000	40.0000	40.0000	40.0000
$f_{\min}$	3.48000	3.48000	3.48000	3.48000	3.48000	3.48000	3.48000	3.48000	3.48000	3.48000

Table 4 Statistical results of the used algorithms for the coupling with a bolted rim

Algorithm	Best	Mean	Worst	SD	FEs
ABC	3.480000008106810	3.480001658016732	3.480041861581182	5.8746E−06	5000
PSO	3.480000006114823	3.539601555748261	4.600000000000000	2.1333E−01	5000
MFO	**3.480000000000000**	**3.479999999999998**	**3.480000000000000**	**1.6943E−15**	5000
ALO	3.480000000050896	3.480000011225216	3.480000040146861	9.5005E−09	5000
ER-WCA	3.480000000000000	3.480000000268378	3.480000005923427	8.8909E−10	5000
GWO	3.480000515508404	3.480188334382009	3.480645090243778	1.5178E−04	5000
WCA	3.480000000000004	3.480000000257054	3.480000008033096	1.1405E−09	5000
MBA	3.480000003147799	3.480000051576293	3.480000454159966	7.4154E−08	5000
SSA	3.480000000223970	3.480000014291660	3.480000085511799	1.6555E−08	5000
WAO	3.480000000346666	3.482102783880349	3.552623463849053	1.0670E−02	5000

3 Experimental Results

The performances of each used algorithm are validated by solving six mechanical design problems, namely, coupling with a bolted rim, car side impact, rolling element bearing, step-cone pulley, belleville spring, and speed reducer design problem. It is worth mentioning that an exterior penalty function is adapted for MFO, ALO, SSA, WOA, GWO, PSO and ABC algorithms to deal with constraints design. The mathematical formulations for the engineering

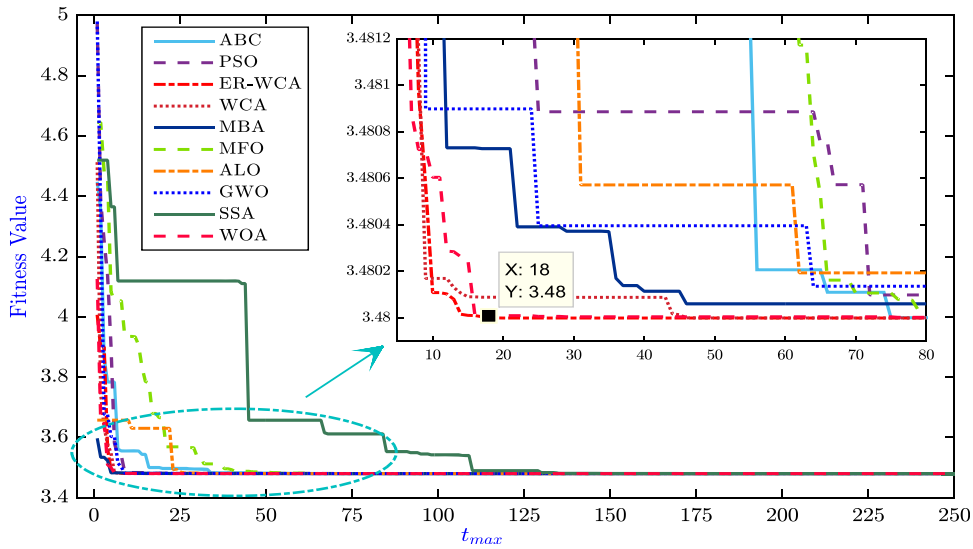

Fig. 2 Convergence speed graph for the coupling with a bolted rim

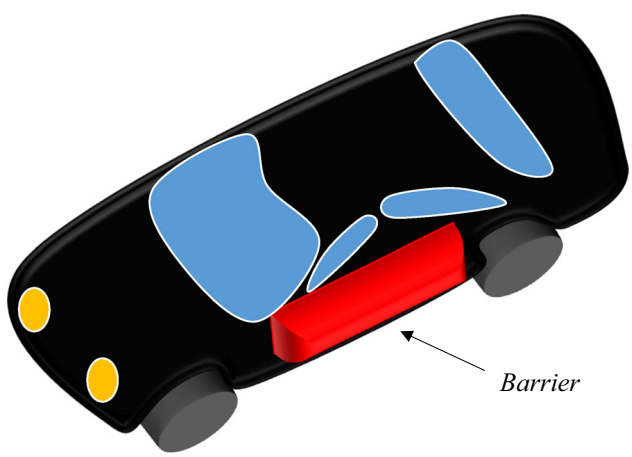

Fig. 3 Car side impact problem

problems can be found in the "Appendix". The maximization problems, in case of rolling element, are transformed into a minimization one by multiplying the objective function with − 1. The equality constraints are converted into inequality ones; the tolerance value is 0.001 (in case of step-cone pulley problem).

The specific parameter settings of each algorithm are given in Table 1. In order to study the convergence behavior of the algorithms, the maximum number iterations and the population size are equal for each case study as shown in Table 2. To measure the robustness of the compared meta-heuristics in solving the six problems we run each algorithm 50 times. The statistical results including the best, mean, and worst solutions as well as the standard deviation. For more readability, the better solution obtained among the ten optimizers is in boldface.

3.1 Design of the Coupling with a Bolted Rim Problem

The problem was initially proposed by Giraud-Moreau and Lafon [17]. As shown in Fig. 1, a torque M is transmitted by adhesion using N bolts of diameter d placed at radius R_B. The objective function includes three terms with weighting coefficients. d is discrete, N is an integer, R_B and M are continuous variables. The problem is subjected to eleven inequality constraints.

Tables 3 and 4 present the best optimal solution and the statistical simulation results obtained by the algorithms for the coupling with a bolted rim problem. From Table 3, it can be seen that all used approaches are able to find the global feasible solution. However, the MFO algorithm is the most robust in solving this problem with standard deviation values of 1.6943E−15, followed by ER-WCA, WCA, ALO, ABC, SSA, MBA, GWO, WOA, and PSO. The convergence behavior of the algorithms for the first case study is presented in the Fig. 2. From the figure, it can be observed that both ER-WCA and WOA approaches reach practically the best value in the 18th iteration, and this clearly indicates how fast these latter compared to other algorithms.

3.2 Design of the Car Side Impact Problem

This problem was originally proposed by Gu et al. [18]. The car, Fig. 3, is exposed to a side impact on the foundation of the European Enhanced Vehicle Safty Committee (EEVC) procedures. The objective is to minimize the total weight of the car using eleven mixed variables. The eight and the nine variables are discrete, and the rest of them are continuous. The problem is subjected to ten inequality constraints.

Table 5 Comparison of the best optimum solution for the car side impact design

Variables	Algorithm									
	ABC	PSO	MFO	ALO	ER-WCA	GWO	WCA	MBA	SSA	WOA
x_1	0.5000000	0.5000000	0.500000	0.500000	0.500000	0.500000	0.5000000	0.5000000	0.5000000	0.500000
x_2	1.0624205	1.1165737	1.116539	1.111960	1.118688	1.111484	1.1155932	1.1172701	1.1093195	1.108001
x_3	0.5148211	0.5000000	0.500000	0.500000	0.500000	0.500000	0.5000000	0.5000030	0.5000000	0.534477
x_4	1.4491503	1.3018547	1.301908	1.302860	1.298407	1.312203	1.3034919	1.3008438	1.3148010	1.305770
x_5	0.5000000	0.5000000	0.500000	0.500000	0.500000	0.501214	0.5000146	0.5000000	0.5000000	0.500000
x_6	1.500000	1.5000000	1.500000	5000000	1.500000	1.500000	1.5000000	1.4999867	1.4999998	1.473844
x_7	0.5000000	0.5000000	0.500000	0.500000	0.500000	0.500034	0.5000000	0.5000000	0.5000000	0.500000
x_8	0.3450000	0.3450000	0.345000	0.345000	0.345000	0.345000	0.3450000	0.3450000	0.3450000	0.345000
x_9	0.1920000	0.3450000	0.345000	0.192000	0.192000	0.192000	0.1920000	0.3450000	0.1920000	0.192000
x_{10}	− 29.34755	− 19.52470	− 19.5304	− 19.6330	− 19.1461	− 20.6057	− 19.69967	− 19.40045	− 20.821793	− 19.69924
x_{11}	0.7410998	− 0.019297	− 0.000006	0.023649	− 0.01527	− 0.25531	− 0.023854	− 0.379205	0.4412962	3.4816923
$f_{\min}$	23.175889	22.842984	22.84297	22.84298	22.84298	22.85279	22.843596	22.846514	23.042162	23.042162

The car side impact design is considered as a real case of a mechanical optimization problem with mixed discrete and continuous design variables. The best optimal solutions obtained by the methods for the problem are listed in Table 5, and their statistical results are given in Table 6. From Table 5, the MFO algorithm achieves the best value among the algorithms. Regarding the robustness, it can be observed from Table 6 that the used algorithms almost have the same standard deviation. Among the used algorithms it can be observed that the WOA is not able to find the near optimal solution.

Figure 4 shows the comparison of the convergence speed of the algorithms to the best value for the car side impact. In this case, both MFO and WCA converge much faster than the other used methods.

3.3 Design of the Rolling Element Bearing Problem

As the third problem, the goal is to maximize the dynamic load carrying capacity of rolling element bearing [19]. There are ten mixed design variables among them the pitch diameter D_m, ball diameter D_b, number of balls Z, inner and outer raceway curvature coefficients f_i and f_o (Fig. 5) in addition to five other variables that affect the geometry of the bearing (K_{Dmin}, K_{Dmax}, ε, e and ζ). All variables are continuous except the number of balls which is discrete. The problem is subjected to nine nonlinear constraints on kinematic conditions and manufacturing requirement.

As depicted in Table 7, the best optimal solution for the bearing design problem is − 85,546.80 and this value is obtained by almost compared algorithms except for the ABC, GWO, and WOA. Table 8 compares the statistical results delivered by each method. From Table 8, it is clear that the small value is obtained by MFO. Figure 6 shows the convergence curve of the ten selected algorithms for the rolling element bearing. As can be observed from the zoom part of the Fig. 6, the ER-WCA and MBA are the fastest to achieve the near optimal solution for this problem (after 27 iterations).

3.4 Design of the Step-Cone Pulley Problem

The four step-cone pulley problem, Fig. 7, must be designed for minimum weight [44]. The problem includes five variables, the diameters of each step d_i (i = 1,…, 4), and the width of the pulley ω. Eleven constraints are considered, three equality constraints and eight inequality constraints. The step pulley transmitted at least 0.75 hp, with an input speed of 350 rpm and output speeds of 750, 450, 250 and 150 rpm.

The best optimal solutions and statistical results of the methods for the problem are demonstrated in Tables 9 and

Table 6 Statistical results of the used algorithms for the car side impact design problem

Algorithm	Best	Mean	Worst	SD	FEs
ABC	23.175889625990923	23.860680484086661	25.010762794496625	3.7642E−01	29,750
PSO	22.842984930697273	23.613571153685552	26.190640350882905	7.5252E−01	29,750
MFO	**22.842970873572792**	22.972834963056012	23.687547312526856	2.0794E−01	29,750
ALO	22.842980706120642	23.108402571838820	23.824366429288702	2.9093E−01	29,750
ER-WCA	22.843264619959352	23.069925342953958	24.455312800924212	3.5021E−01	29,750
GWO	22.852792762688743	22.992226614913008	23.347095471895521	1.6277E−01	29,750
WCA	22.843036481964047	22.975164427881293	23.370933765943949	1.9772E−01	29,750
MBA	22.843596400842499	22.936421047192962	23.488942174549098	1.5258E−01	29,750
SSA	22.846514099392973	23.253716124255313	23.829530847339793	3.0557E−01	29,750
WOA	23.042162202328310	24.814486173621617	27.360813682283315	9.6570E−01	29,750

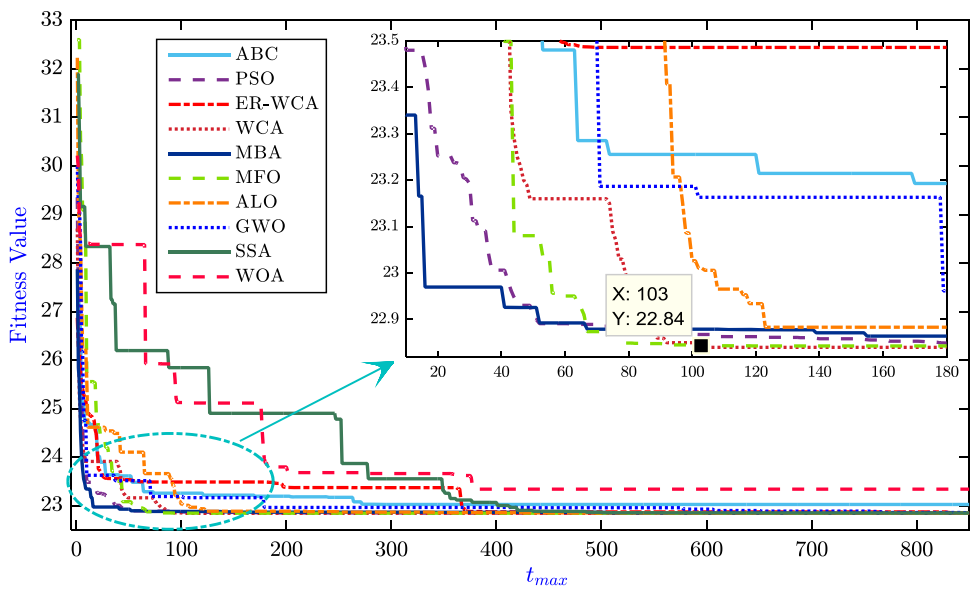

Fig. 4 Convergence speed graph for the car side impact

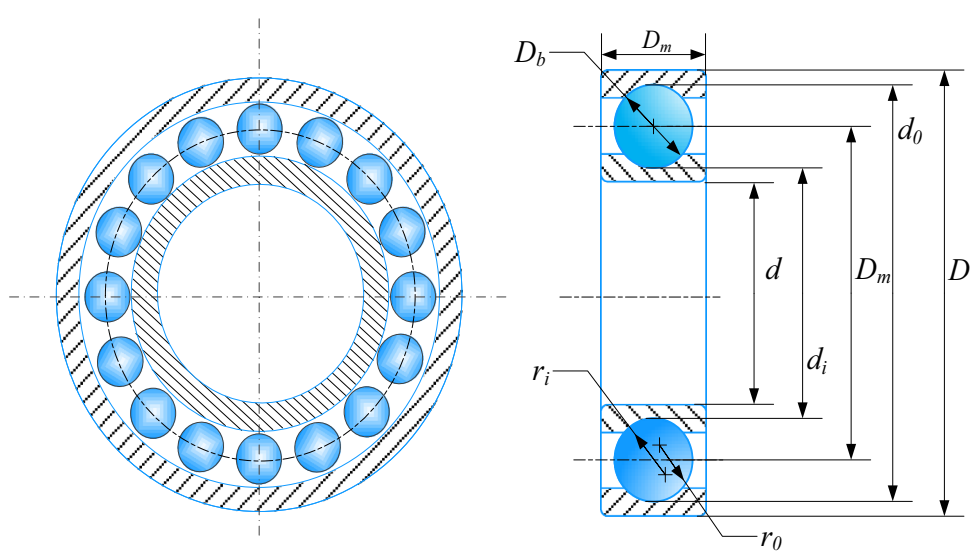

Fig. 5 Schematic view of the rolling element bearing

Table 7 Comparison of the best optimum solution for the rolling element problem

Variables	Algorithm									
	ABC	PSO	MFO	ALO	ER-WCA	GWO	WCA	MBA	SSA	WOA
D_m	125.6599	125.7196	125.7196	125.71800	125.7196	125.7090	125.7196	125.7196	125.7172	125.6426
D_B	21.40862	21.42524	21.42524	21.425242	21.42524	21.42316	21.42524	21.42524	21.42519	21.40935
Z	11.00000	11.00000	11.00000	11.000000	11.00000	11.00000	11.00000	11.00000	11.00000	11.00000
f_i	0.515000	0.515000	0.515000	0.5150000	0.515000	0.515000	0.515000	0.515000	0.515000	0.515000
f_o	0.515000	0.515000	0.515000	0.5157018	0.515000	0.529322	0.515000	0.515000	0.515067	0.515014
$K_{D\min}$	0.427166	0.414517	0.414517	0.4541646	0.414517	0.420867	0.414517	0.414517	0.417673	0.402274
$K_{D\max}$	0.668849	0.660509	0.660509	0.6464928	0.660509	0.633296	0.660509	0.660509	0.686315	0.641900
ε	0.300000	0.300000	0.300000	0.3000122	0.300000	0.300224	0.300000	0.300000	0.300057	0.301492
e	0.071386	0.081312	0.081312	0.0638003	0.081312	0.020000	0.081312	0.081312	0.021778	0.021578
ζ	0.600000	0.666288	0.666288	0.6107592	0.666288	0.619432	0.666288	0.666288	0.632206	0.609509
$f_{\min}$	− 85428.2	− 85546.8	− 85546.80	− 85546.63	− 85546.80	− 85529.05	− 85546.80	− 85546.80	− 85546.41	− 85433.01

10 respectively. According to the Table 9, expect to GWO approaches all other algorithms can obtain the global solution. From the statistical results, it can be observed that SSA and MFO are the most effective in solving this problem with lowest best values.

The convergence history of the ten methods to the best solution for the step-cone pulley problem is given in Fig. 8. From the figure, it is clear that the MFO and MBA can converge rapidly to the near best solution from the initial iterations comparing with referred algorithms (Fig. 9).

3.5 Design of the Belleville Spring Problem

The problem was originally proposed by Coello [6], where the objective is to minimize the volume of the spring (the schematic view of the problem is shown in Fig. 9). There are four continuous variables including the external diameter D_e, internal diameter D_i, thickness t, and the height of the spring h. The problem is subjected to seven nonlinear constraints.

The best optimal value for the belleville spring problem is achieved by PSO, WCA, ER-WCA, MBA, and SSA, as shown in Table 11. From Table 12, it can be said that the MBA version is the most effective in solving this problem with the lowest standard deviation value. The WOA approach is not able to solve this problem may need more iterations to achieve the optimal solution. From the convergence graph given in the Fig. 10, the PSO is faster than the other employed algorithms for this problem and can achieve the near best solution after 126 iterations.

3.6 Design of the Speed Reducer Problem

The last problem considered in the present article is the optimization of the spur speed reducer [51], the schematic view of the problem and the variables are given in Fig. 11. The speed reducer must be designed for minimum volume using seven variables, namely, the face width b, teeth module m, number of teeth on pinion z, length of the first shaft between bearings l_1, length of the second shaft between bearings l_2, the diameter of first shaft d_1 and diameter of second shaft d_2. All the variables are continuous except the third one is an integer.

Table 13 lists the values of the variables and the objective function of the best optimal solution found by the algorithms for the problem. Also, Table 14 presents the statistical results of each algorithm. As shown in Table 13, ALO, GWO, SSA and WOA are not able to find the optimal global solution value. As for the robustness (Table 14), the MFO is the best one in solving the problem of the speed reducer with a small standard value.

The convergence curves of the algorithms for the spur speed reducer are shown in Fig. 12. From the zoom part of

Table 8 Statistical results of the used algorithms for the rolling element bearing problem

Algorithm	Best	Mean	Worst	SD	FEs
ABC	− 85,428.24954324059	− 85,121.75442029411	− 83,859.08513871901	3.6257E+02	25,000
PSO	− 85,546.80516639301	− 81,775.47830855026	− 33,705.06062190217	8.1802E+03	25,000
MFO	**− 85,546.80166904321**	− 85,459.04835563231	− 84,459.78493720232	2.9768E+02	25,000
ALO	− 85,546.63771200170	− 84,032.86362380702	− 73,872.81645445418	3.1218E+03	25,000
ER − WCA	− 85,546.80166870290	− 85,198.28541167990	− 80,481.64031630915	1.2258E + 03	25,000
GWO	− 85,529.08304433595	− 83,395.08496039196	− 43,543.45084640419	8.2245E+03	25,000
WCA	− 85,546.80166903971	− 85,320.98619768269	− 80,482.38219421564	8.4006E+02	25,000
MBA	− 85,546.80166870559	− 85,545.91879022206	− 85,528.98125696967	3.9311E+00	25,000
SSA	− 85,546.41055632396	− 83,930.60952130405	− 74,121.96057283178	2.8890E+03	25,000
WOA	− 85,433.01833538813	− 6.938418742253087	− 4.201153052797422	1.9229E+04	25,000

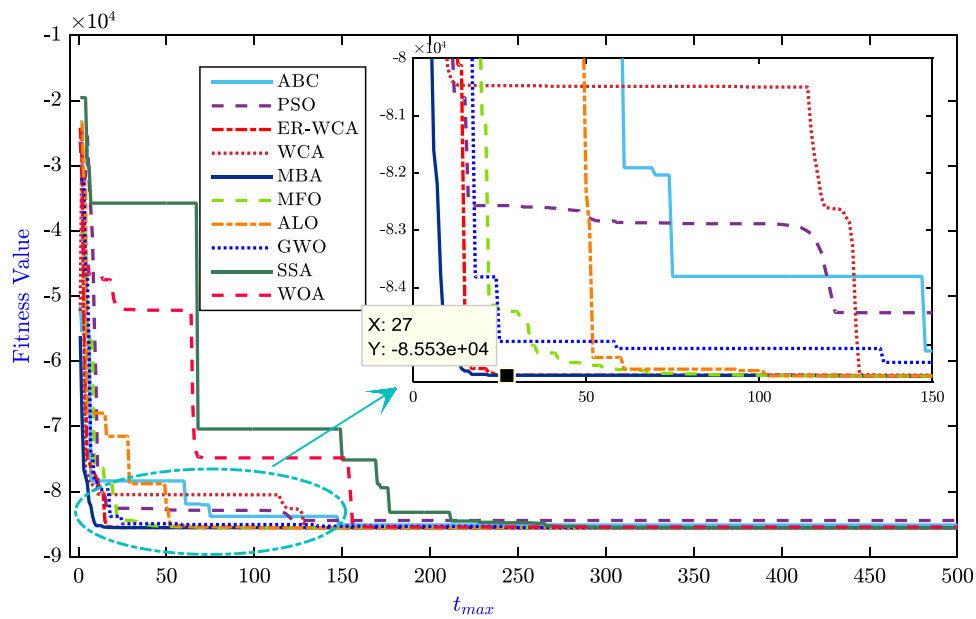

Fig. 6 Convergence speed graph for the rolling element bearing problem

the figure, it can be seen that ABC and WCA are the much faster for this problem and can reach the optimal solution in 74 iterations.

3.7 Discussions

The present paper introduce the application of ten recent meta-heuristic for six real mechanical problems, including seven swarm techniques. Form the comparative results presented in the previous sub-sections; it is clear that the MFO technique exhibited an evident superiority compared with the other employed algorithms. More specifically, MFO is the very powerful in solving five studied problems. For the coupling with a bolted rim and speed reducer problems MFO is very competitive in both solution quality and robustness. Regarding the car side impact design, rolling element bearing and step-cone pulley problem, the MFO algorithm is the best one by given the lowest value of the objective function. In case of the belleville spring problem MFO is not able to find the global optimum solution.

The ER-WCA, WCA and MBA approaches can obtain the optimal solution for the six problems. Moreover, in terms of the convergence speed, these algorithms are relatively fastest than then the other used algorithms, that means required less computation time to reach the near-optimal global solution. However, the robustness of ER-WCA, WCA, and MBA remain weak and need to more improvement.

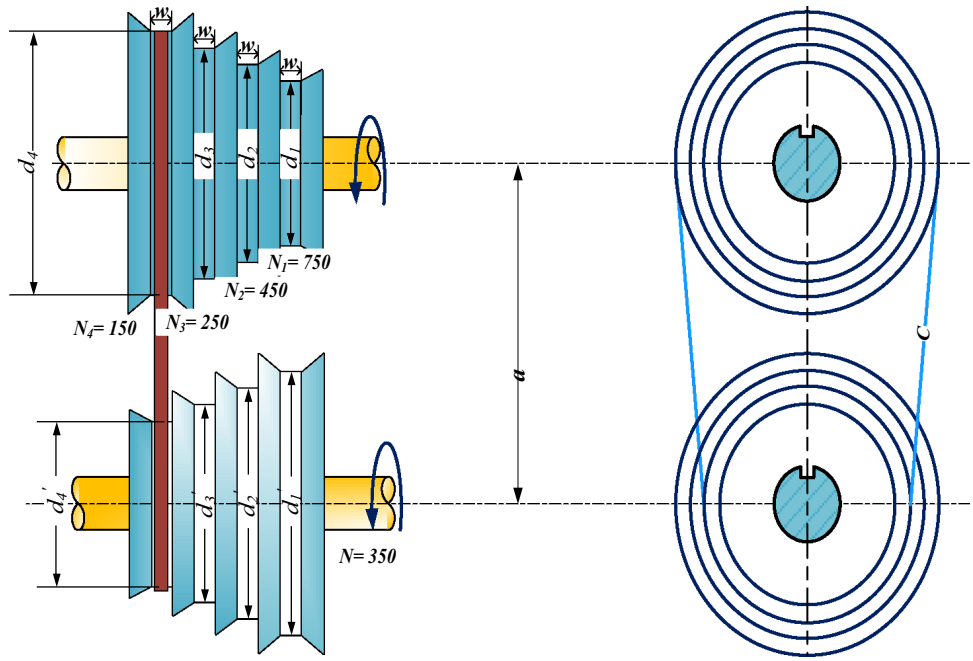

Fig. 7 Schematic view of the step-cone pulley

Table 9 Comparison of the best optimum solution for the step-cone pulley problem

Variables	Algorithm									
	ABC	PSO	MFO	ALO	ER-WCA	GWO	WCA	MBA	SSA	WOA
d_1	40.004482	40.000000	40.00000	40.00000	40.000000	40.002453	40.000000	40.000000	40.000000	40.000000
d_2	54.789141	54.764326	54.76430	54.76431	54.764300	54.796662	54.764300	54.764300	54.764300	54.764326
d_3	73.053184	73.013239	73.01317	73.01318	73.013176	73.034577	73.013176	73.013176	73.013176	73.013239
d_4	88.432832	88.428376	88.42841	88.42840	88.428419	88.433401	88.428419	88.428419	88.428419	88.428376
ω	86.009723	85.986297	85.98624	85.98625	85.986242	86.014899	85.986242	85.986242	85.986242	85.986297
$f_{\min}$	16.648275	16.634521	16.63450	16.63450	16.634504	16.647961	16.634504	16.634504	16.634504	16.634521

Table 10 Statistical results of the used algorithms for the step-cone pulley problem

Algorithm	Best	Mean	Worst	SD	FEs
ABC	16.648275796108361	16.791388798756639	17.468562469266608	1.8164E−01	15,000
PSO	16.634521390468590	20.938294775534292	24.848825979899701	3.3498E+00	15,000
MFO	**16.634504908542510**	17.839171521699303	24.777860363891968	1.4201E+00	15,000
ALO	16.634508822964680	16.789416289510655	18.015810477463781	3.6058E−01	15,000
ER-WCA	16.634509737266015	17.647333072755480	18.832978587086284	8.3766E−01	15,000
GWO	16.647961284982529	18.128588770688751	19.015492811262035	9.3755E−01	15,000
WCA	16.634508495133945	17.530376823113027	18.833029971580562	9.2296E−01	15,000
MBA	16.634507868520153	16.702535787372614	18.323714563489911	2.6279E−01	15,000
SSA	**16.634504396888736**	17.286354161691335	19.045457285033041	1.8164E−01	15,000
WOA	16.634521390468590	20.938294775534292	24.848825979899701	3.3498E+00	15,000

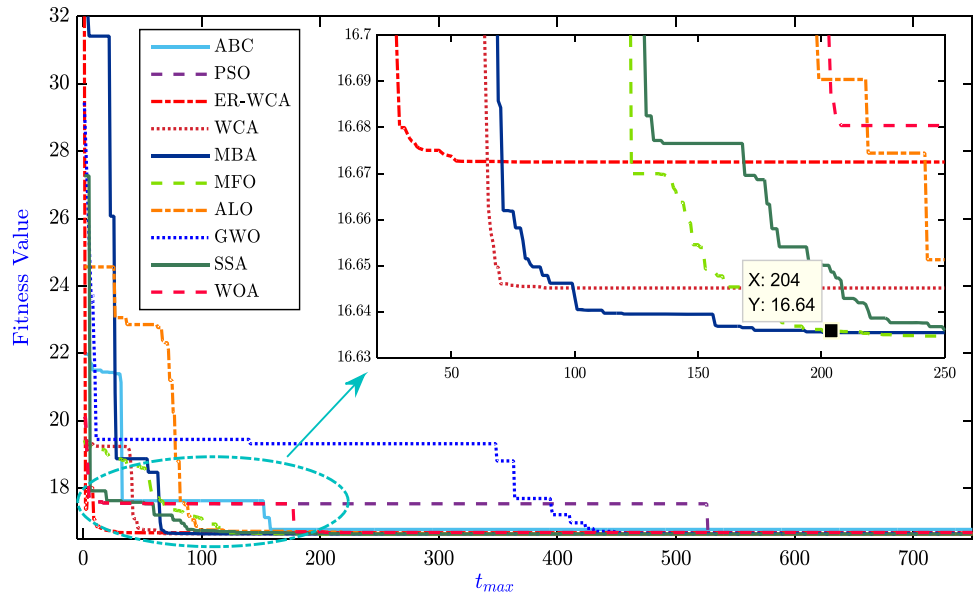

Fig. 8 Convergence speed graph for the step-cone pulley problem

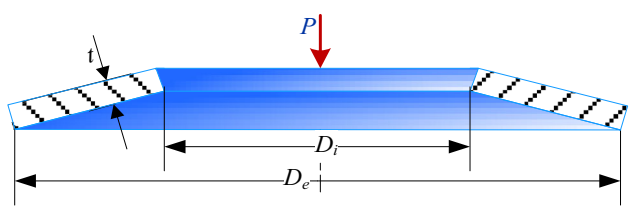

Fig. 9 Schematic view of the belleville spring

The WOA and ABC algorithm can be considered as the worst among the compared methods. These two algorithms can find only the optimal solution of two problems among the six studied problems (coupling with a bolted rim and speed reducer). The GWO method can solve three problems of the total of six. The SSA technique is able to find the optimal solution of five problems and fails in optimizing the speed reducer problem.

As we know, the meta-heuristic algorithms require an exact configuration of their internal control parameters for more efficient performance. Choosing the same *NP* value for all used algorithms may be an important factor in fails some methods.

In the present study an exterior penalty is adopted to MFO, ALO, SSA, WOA and GWO algorithms to deal with inequality and equality constraints. Really the use of such method is quite simple, however, deciding optimal values of penalty terms especially for the optimization problems with highly constraints turns out to be a difficult optimization problem itself. In the future works, theses algorithms will be reinforced by more advanced methods such as the superiority of feasible points mechanism of Deb [8], the adaptive epsilon mechanism of Takahama and Sakai [56] and others to treat the constrains design.

4 Conclusions

Solving the mechanical engineering design optimization problems is considered as a real challenge for the efficiency of each new developed meta-heuristic algorithm. More

Table 11 Comparison of the best optimum solution for the belleville spring problem

Variables	Algorithm									
	ABC	PSO	MFO	ALO	ER-WCA	GWO	WCA	MBA	SSA	WOA
D_e	11.3417	12.0099	11.9875	11.01325	12.0096	11.9790	12.0097	12.009	12.009	11.9679
D_i	8.97198	10.0304	10.0023	8.728624	10.0300	9.98731	10.0301	10.0304	10.0304	9.95224
t	0.20917	0.20414	0.20418	0.206286	0.20414	0.20455	0.20414	0.20414	0.20414	0.20733
h	0.21063	0.20000	0.20000	0.200035	0.20000	0.20009	0.20000	0.20000	0.20000	0.20000
$f_{\min}$	2.03345	1.97969	1.98120	1.983576	1.97969	1.98921	1.97969	1.97967	1.97967	2.03625

Table 12 Statistical results of the used algorithms for the belleville spring problem

Algorithm	Best	Mean	Worst	SD	FEs
ABC	2.033455172867723	2.167697042207911	2.402849534982527	7.5329E−02	15,000
PSO	**1.9796958842828**	2.01371597513877	2.3500038460826	9.0931E−02	15,000
MFO	1.981209838664833	2.062404058515537	2.276791770261952	6.4371E−02	15,000
ALO	1.983576526646731	2.104509773802777	2.368557356718601	9.4178E−02	15,000
ER-WCA	**1.979698832186995**	2.009130232145132	2.139935737221937	3.2146E−02	15,000
GWO	1.989215160312566	2.009633692436991	2.046591520162516	1.4209E−02	15,000
WCA	**1.979692178773339**	2.001388204296668	2.164943894944752	3.3176E−02	15,000
MBA	**1.979675753382355**	1.979893313247442	1.981627323155631	3.6576E−04	15,000
SSA	**1.979677512235856**	2.084371307163135	2.361004682872697	1.0203E−02	15,000
WOA	2.036250259240720	2.233924922245805	2.966195609880918	1.5003E−01	15,000

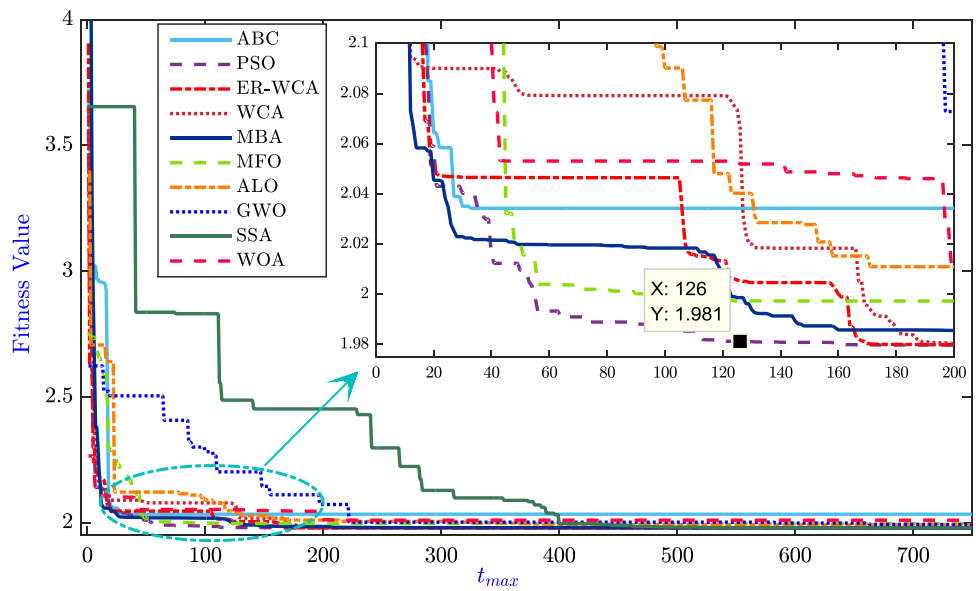

Fig. 10 Convergence speed graph for the belleville spring problem

specifically, these problems involve multiple objectives and mixed variables (continuous, integer and discrete), in addition to various nonlinear constraints on kinematic conditions, manufacturing requirement and performance operating. In the present article, six mechanical optimization problems have been solved by using ten recent algorithms, namely the ABC, PSO, MFO, ALO, ER-WCA, GWO, WCA, MBA, SSA and WOA. The performances of these methods are compared regarding the solution quality, the convergence speed, and the robustness.

In terms of the solution quality and the robustness, MFO was better than the other used algorithms. Also, the metaheuristics used in this study showed improved results for the coupling with a bolted rim, care impact side, rolling element bearing, and the step-cone pulley design problem comparing with the existing results in the literature. Finally, it can be concluded from this study that the used algorithms are important alternatives to solve other real-world optimization problems in such as automotive and other industries area.

Acknowledgements The first author gratefully acknowledge the support provided by Bursa Uludag University Scientific Research Projects Centre (BAP) under Grant Nos. BUAP(MH)-2019/2.

Compliance with Ethical Standards

Conflict of interest The authors declare that they have no conflict of interest.

Appendix

1. Coupling with a bolted rim

The problem can be mathematically formulated as follows:

Objective function: $f(x) = \beta_1\left(\frac{N}{N_m}\right) + \beta_2\left(\frac{R_B+\phi_4(d)+c}{R_m}\right) + \beta_3\left(\frac{M}{M_T}\right)$

Subject to:

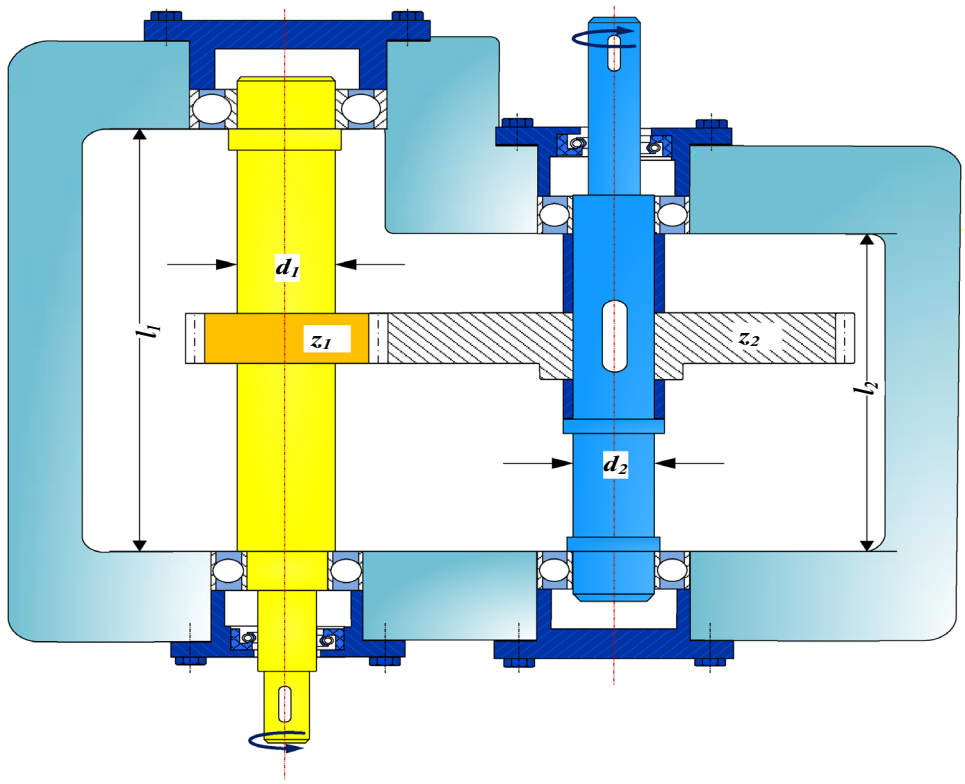

Fig. 11 Schematic view of the speed reducer

Table 13 Comparison of the best optimum solution for the speed reducer problem

Variables	Algorithm									
	ABC	PSO	MFO	ALO	ER-WCA	GWO	WCA	MBA	SSA	WOA
b	3.500000	3.500000	3.500000	3.500000	3.500000	3.500881	3.500000	3.500000	3.50000	3.500411
m	0.700000	0.700000	0.700000	0.700000	0.700000	0.700096	0.700000	0.700000	0.70000	0.700000
z	17.00000	17.00000	17.00000	17.00000	17.00000	17.00101	17.00000	17.00000	17.0000	17.00000
l_1	7.300000	7.300000	7.300000	7.472705	7.300000	7.302118	7.300000	7.300000	7.36496	7.300000
l_2	7.715320	7.715320	7.715320	7.735382	7.715319	7.719974	7.715319	7.715320	7.75803	7.777372
d_1	3.350214	3.350214	3.350214	3.350541	3.350214	3.350684	3.350214	3.350214	3.35033	3.352552
d_2	5.286654	5.286654	5.286654	5.286661	5.286654	5.286708	5.286654	5.286654	5.28666	5.286675
$f_{\min}$	2994.471	2994.471	2994.471	2996.521	2994.471	2995.704	2994.471	2994.471	2996.0217	2996.604

Table 14 Statistical results of the used algorithms for the speed reducer problem

Algorithm	Best	Mean	Worst	SD	FEs
ABC	2994.471067504619	2994.471075844169	2994.471115543837	9.2123E−06	25,000
PSO	2994.471069674640	3070.655058796543	3209.297397650784	5.8657E+01	25,000
MFO	**2994.471066146822**	**2.994471066147108**	**2.994471066151665**	**7.3921E−10**	25,000
ALO	2996.521745443848	3005.644279605541	3014.379001168207	4.7422E+00	25,000
ER-WCA	2994.471066146826	2996.744541331202	3007.436552164085	4.3876E+00	25,000
GWO	2995.704434912354	3001.556162056451	3009.944296784721	4.1218E+00	25,000
WCA	2994.471066147307	2996.203773574547	3016.578575484153	4.8705E+00	25,000
MBA	2994.471371019410	2944.744437623391	2994.484788566012	2.4195E−03	25,000
SSA	2996.021720467607	3005.574377149090	3015.662612037751	4.63871E+00	25,000
WOA	2996.604340024459	3.042915023571878	3233.598124214217	4.0888E+01	25,000

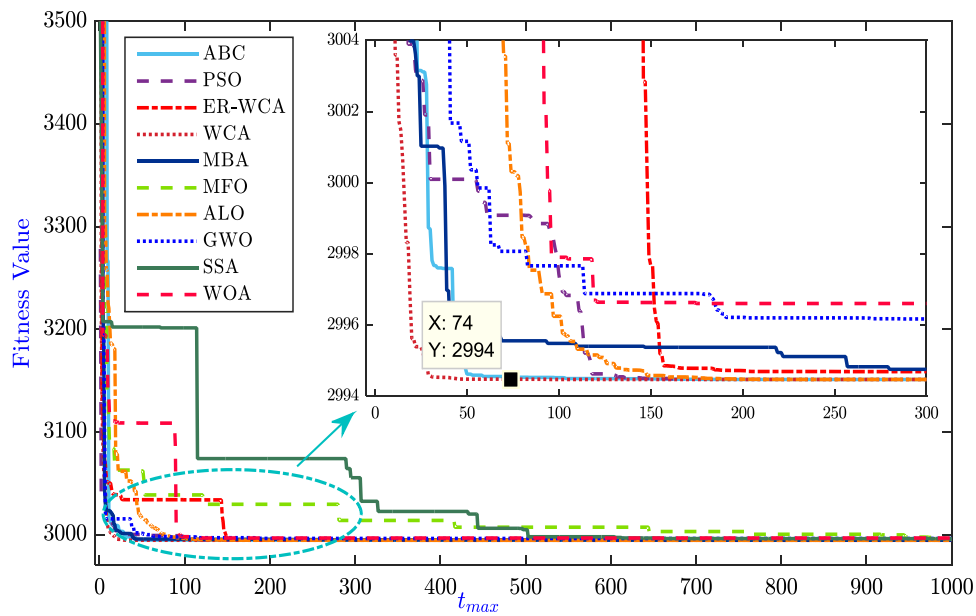

Fig. 12 Convergence speed graph for the speed reducer problem

$$g_1(x) = \frac{\alpha M}{N R_B K(d)} - 1 \le 0,\ g_2(x) = 1 - \frac{2\pi R_B}{\phi_5(d) N} \le 0$$

$$g_3(x) = 1 - \frac{R_B}{\phi_4(d)} + R_M \le 0,\ g_4(x) = N - N_{\max} \le 0$$

$$g_5(x) = R_B - R_{\max} \le 0,\ g_6(x) = N_M - N \le 0$$

$$g_7(x) = R_M - R_B \le 0,\ g_8(x) = M - M_{\max} \le 0$$

$$g_9(x) = M_T - M \le 0,\ g_{10}(x) = d - 24 \le 0$$

$$g_{11}(x) = 6 - d \le 0$$

where $K(d) = \frac{0.9 f_m R_e \pi (\phi_1(d))^2}{4\sqrt{1+3(0.16\phi_3(d) f_1/\phi_1(d))^2}}$, $M_T = 40\,\text{Nm}$, $M_{\max} = 1000\,\text{Nm}$, $f_m = 0.15$, $f_1 = 0.15$

$\alpha = 1.5$, $R_e = 627\,\text{MPa}$, $N_M = 8$, $N_{\max} = 100$, $R_M = 50\,\text{mm}$, $R_{\max} = 1000\,\text{mm}$, $c = 5\,\text{mm}$, $\beta_1 = \beta_2 = \beta_3 = 1.6 \le d \le 24$, $8 \le N \le 100$, $50 \le R_B \le 100$, $40 \le M \le 100$.

See Table 15.

2. Car side impact design

The problem can be mathematically formulated as follows:Objective function: $f(x) = 1.98 + 4.90x_1 + 6.67x_2 + 6.98x_3 + 4.01x_4 + 1.78x_5 + 2.73x_7$

Subject to:

$$g_1(x) = 1.16 - 0.3717x_2x_4 - 0.00931x_2x_{10} - 0.484x_3x_9 + 0.01343x_6x_{10} \le 1$$

Table 15 Discrete values for bolts

d	$d_e = \phi_1(d)$	$d_2 = \phi_2(d)$	$p = \phi_3(d)$	$b_m = \phi_4(d)$	$s_m = \phi_5(d)$
6	5.0620	5.3500	1.00	7.50	14.50
8	6.8270	7.1880	1.25	9.50	18.50
10	8.5930	9.0260	1.50	12.50	23.50
12	10.358	10.863	1.75	13.50	26.50
14	12.124	12.701	2.00	15.50	29.50
16	14.124	14.701	2.00	17.00	32.00
20	17.655	18.376	2.50	21.00	40.00

$$g_2(x) = 0.261 - 0.0159x_1x_2 - 0.188x_1x_8 - 0.019x_2x_7 + 0.0144x_3x_5 + 0.0008757x_5x_{10} + 0.080405x_6x_9 + 0.00139x_8x_{11} + 0.00001575x_{10}x_{11} \le 0.32$$

$$g_3(x) = 0.214 + 0.00817x_5 - 0.131x_1x_8 - 0.0704x_1x_9 + 0.03099x_2x_6 - 0.018x_2x_7 + 0.0208x_3x_8 + 0.121x_3x_9 - 0.00364x_5x_6 + 0.0007715x_5x_{10} - 0.0005354x_6x_{10} + 0.00121x_8x_{11} \le 0.32$$

$$g_4(x) = 0.074 - 0.061x_2 - 0.163x_3x_8 + 0.001232x_3x_{10} - 0.166x_7x_9 + 0.227x_2^2 \le 0.32$$

$$g_5(x) = 28.98 + 3.818x_3 - 4.2x_1x_2 + 0.0207x_5x_{10} + 6.63x_6x_9 - 7.7x_7x_8 + 0.32x_9x_{10} \le 32$$

$$g_6(x) = 33.86 + 2.95x_3 + 0.1792x_{10} - 5.057x_1x_2 - 11.0x_2x_8 - 0.0215x_5x_{10} - 9.98x_7x_8 + 22.0x_8x_9 \le 32$$

$$g_7(x) = 46.36 - 9.9x_2 - 12.9x_1x_8 + 0.1107x_3x_{10} \le 32$$

$$g_8(x) = 4.72 - 0.5x_4 - 0.19x_2x_3 - 0.0122x_4x_{10} + 0.009325x_6x_{10} + 0.000191x_{11}^2 \le 4$$

$$g_9(x) = 10.58 - 0.674x_1x_2 - 1.95x_2x_8 + 0.02054x_3x_{10} - 0.0198x_4x_{10} + 0.028x_6x_{10} \le 9.9$$

$$g_{10}(x) = 16.45 - 0.489x_3x_7 - 0.843x_5x_6 + 0.0432x_9x_{10} - 0.0556x_9x_{11} - 0.000786x_{11}^2 \le 15.7$$

where $0.5 \le x_1 - x_7 \le 1.5, x_8, x_9 \in (0.192, 0.345)$ and $-30 \le x_{10}, x_{11} \le 30$.

3. Rolling element bearing

The problem can be mathematically formulated as follows:

Objective function:

$$f(x) = \begin{cases} C_d = f_c Z^{\frac{2}{3}} D_b^{1.8} \text{ if } D_b \le 25.4\,\text{mm} \\ C_d = 3.647 f_c Z^{\frac{2}{3}} D_b^{1.4} \text{ if } D_b > 25.4\,\text{mm} \end{cases}$$

Subject to:

$$g_1(x) = \frac{\phi_0}{2\sin^{-1}\left(\frac{D_b}{D_m}\right)} - Z + 1 \ge 0,\ g_2(x) = 2D_b - K_{D\min}(D-d) \ge 0$$

$$g_3(x) = K_{D\max}(D-d) - 2D_b \ge 0,\ g_4(x) = \zeta B_\omega - D_b \ge 0$$

$$g_5(x) = D_m - 0.5(D+d) \ge 0,\ g_6(x) = (0.5+e)(D+d) - D_m \ge 0$$

$$g_7(x) = 0.5(D - D_m - D_b) - \varepsilon D_b \ge 0,\ g_8(x) = f_i - 0.515 \ge 0$$

$$g_9(x) = f_o - 0.515 \ge 0$$

where

$$f_c = 37.91\left[1 + \left\{1.04\left(\frac{1-\gamma}{1+\gamma}\right)^{1.72}\left(\frac{f_i(2f_o-1)}{f_o(2f_i-1)}\right)^{0.41}\right\}^{10/3}\right]^{-0.3},$$

$$\gamma = \frac{D_b\cos\alpha}{D_m}, f_i = \frac{r_i}{D_b}, f_o = \frac{r_o}{D_b}$$

$$\phi_0 = 2\pi - 2\cos^{-1} \times \left(\frac{\{(D-d)/2 - 3(T/4)\}^2 + \{D/2 - T/4 - D_b\}^2 - \{d/2 - T/4\}^2}{2\{(D-d)/2 - 3(T/4)\}\{D/2 - T/4 - D_b\}}\right)$$

where $T = D - d - 2D_b$, $D = 160$, $d = 90$, $\beta_\omega = 30$, $0.5(D+d) \le D_m \le 0.6(D+d), 0.15(D-d) \le D_b \le 0.45(D-d)$, $4 \le Z \le 50, 0.515 \le f_i \le 0.6, 0.515 \le f_o \le 0.6, 0.6 \le K_{D\max} \le 0.7, 0.3 \le \varepsilon \le 0.4, 0.02 \le e \le 0.1, 0.6 \le f_i \le 0.85$.

4. Step-cone pulley

The problem can be mathematically formulated as follows:

Objective function:

$$f(x) = \rho\omega\left[d_1^2\left\{1 + \left(\frac{N_1}{N}\right)^2\right\} + d_2^2\left\{1 + \left(\frac{N_2}{N}\right)^2\right\} + d_3^2\left\{1 + \left(\frac{N_3}{N}\right)^2\right\} + d_4^2\left\{1 + \left(\frac{N_4}{N}\right)^2\right\}\right]$$

Subject to:

$$h_1(x) = c_1 - c_2 = 0, \qquad h_2(x)$$

$$h_3(x) = c_1 - c_4 = 0, \qquad g_{1,2,3,4}(x)$$

$$g_{5,6,7,8}(x) = P_i \ge (0.75 \times 745.6998)$$

where:

Table 16 Variation of $f(a)$ with a

a	≤ 1.4	1.5	1.6	1.7	1.8	1.9	2	2.1	2.2	2.3	2.4	2.5	2.6	2.7	≥ 2.8
$f(a)$	1	0.85	0.77	0.71	0.66	0.63	0.6	0.58	0.56	0.55	0.53	0.52	0.51	0.51	0.5

– C_i indicates the length of the belt to obtain speed N_i and is given by

$$C_i = \frac{\pi d_i}{2}\left(1+\frac{N_i}{N}\right) + \frac{\left(\frac{N_i}{N}-1\right)^2}{4a} + 2a, \quad i = 1,\ldots,4$$

– R_i is the tension ratio and is given by

$$R_i = \exp\left[\mu\left\{\pi - 2\sin^{-1}\left\{\left(\frac{N_i}{N}-1\right)\frac{d_i}{2a}\right\}\right\}\right],\ i = 1,\ldots,4$$

– P_i is the power transmitted at each step

$$R_i = st\omega\left[1-\exp\left[-\mu\left\{\pi - 2\sin^{-1}\left\{\left(\frac{N_i}{N}-1\right)\frac{d_i}{2a}\right\}\right\}\right]\right]\frac{\pi d_i N_i}{60},\ = 1,\ldots,4$$

$\rho_1 = 7200\,\text{kg/m}^3$, $a = 3\,\text{m}$, $\mu = 0.35$, $s = 1.75\,\text{MPa}$, $t = 8\,\text{mm}$, $40 \leq d_i \leq 100$, $16 \leq \omega \leq 100$.

5. Belleville spring

The problem can be mathematically formulated as follows:

Objective function: $f(x) = 0.07075\pi\left(D_e^2 - D_i^2\right)t$

Subject to:

$$g_1(x) = S - \frac{4E\delta_{\max}}{(1-\mu^2)\alpha D_e^2}\left[\beta\left(h-\frac{\delta_{\max}}{2}\right)+\gamma t\right] \geq 0$$

$$g_2(x) = \left(\frac{4E\delta}{(1-\mu^2)\alpha D_e^2}\left[\left(h-\frac{\delta}{2}\right)(h-\delta)t + t^3\right]\right) - P_{\max} \geq 0$$

$$g_3(x) = \delta_l - \delta_{\max} \geq 0, \qquad g_4(x) = H - h - t \geq 0$$

$$g_5(x) = D_{\max} - D_e - \geq 0, \qquad g_6(x) = D_e - D_i \geq 0$$

$$g_7(x) = 0.3 - \left(\frac{h}{D_e - D_i}\right) \geq 0$$

where $\alpha = \left(\frac{6}{\pi\ln(K)}\right)\left(\frac{K-1}{K}\right)^2$, $\beta = \left(\frac{6}{\pi\ln(K)}\right)\left(\frac{K-1}{K}-1\right)$, $\gamma = \left(\frac{6}{\pi\ln(K)}\right)\left(\frac{K-1}{2}\right)$ $P = \frac{\log_{10}\log_{10}(8.122e6\mu+0.8)-C_1}{n}$, $h = \left(\frac{2\pi N}{60}\right)^2\left(\frac{2\pi\mu}{E_f}\right)\left(\frac{R^4}{4}-\frac{R_o^4}{4}\right)$, $P_{\max} = 1000\text{lb}$, $\delta_{\max} = 0.2\text{in.}$, $S = 200\text{KPsi}$, $E = 30e6\ psi$, $\mu = 0.3$, $H = 2\text{in.}$, $D_{\max} = 12.01\text{in.}$, $K = \frac{D_e}{D_i}$, $\delta(l) = f(a)a$, $a = \frac{h}{t}$.

$5 \leq D_e \leq 15, 5 \leq D_i \leq 15, 0.2 \leq t \leq 0.25, 0.2 \leq h \leq 0.25.$

See Table 16.

6. Speed Reducer

The problem can be mathematically formulated as follows: *Objective function:* $f(x) = 0.7854bm^2(3.3333z^2 + 14.9334z - 43.0934) - 1.508b\left(d_1^2 + d_2^2\right) + 7.4777\left(d_1^3 + d_2^3\right) + 0.7854\left(l_1 d_1^2 + l_2 d_2^2\right)$

Subject to:

$$g_1(x) = \frac{27}{b\,m^2 z} - 1 \leq 0, \qquad g_2(x) = \frac{397.5}{bm^2 z^2} - 1 \leq 0$$

$$g_3(x) = \frac{1.93 l_1^3}{mz d_1^4} - 1 \leq 0, \qquad g_4(x) = \frac{1.93 l_2^3}{mz d_2^4} - 1 \leq 0$$

$$g_5(x) = \frac{\sqrt{\left(\frac{745 l_1}{mz}\right)^2 + 16.9 \times 10^6}}{\left(110 d_1^3\right)} - 1 \leq 0,$$

$$g_6(x) = \frac{\sqrt{\left(\frac{745 l_2}{mz}\right)^2 + 157.5 \times 10^6}}{\left(85 d_2^3\right)} - 1 \leq 0$$

$$g_7(x) = \frac{mz}{40} - 1 \leq 0, \qquad g_8(x) = \frac{5m}{b} - 1 \leq 0$$

$$g_9(x) = \frac{b}{12m} - 1 \leq 0, \qquad g_{10}(x) = \frac{1.5d_1 + 1.9}{l_1} - 1 \leq 0$$

$$g_{11}(x) = \frac{1.1d_2 + 1.9}{l_2} - 1 \leq 0$$

where $2.6 \leq b \leq 3.6, 0.7 \leq m \leq 0.8, 17 \leq z \leq 28, 7.3 \leq l_1 \leq 8.3, 7.3 \leq l_2 \leq 8.3, 2.9 \leq d_1 \leq 3.9$ and $5 \leq d_2 \leq 5.5$.

References

1. Abderazek H, Ferhat D, Ivana A (2017) Adaptive mixed differential evolution algorithm for bi-objective tooth profile spur gear optimization. Int J Adv Manuf Technol 90(5–8):2063–2073
2. Abderazek H, Ferhat D, Atanasovska I, Boualem K (2015) A differential evolution algorithm for tooth profile optimization with respect to balancing specific sliding coefficients of involute cylindrical spur and helical gears. Adv Mech Eng 7(9):1–11
3. Alatas B (2011) ACROA: artificial chemical reaction optimization algorithm for global optimization. Expert Syst Appl 38(10):13170–13180
4. Beyer HG, Schwefel H-P (2002) Evolution strategies—a comprehensive introduction. Nat Comput 1(1):3–52
5. Cheng MY, Prayogo D (2014) Symbiotic organisms search: a new metaheuristic optimization algorithm. Comput Struct 139:98–112
6. Coello CAC (2000) Treating constraints as objectives for single-objective evolutionary optimization. Engineering Optimization 32(3):275–308

7. Darwin C (1859) On the origin of species by means of natural selection, or the preservation of favored races in the struggle for life. J Murray, London
8. Deb K (2000) An efficient constraint handling method for genetic algorithms. Comput Methods Appl Mech Eng 186(2–4):311–338
9. Dhiman G, Kumar V (2017) Spotted hyena optimizer: a novel bio-inspired based metaheuristic technique for engineering applications. Adv Eng Softw 114:48–70
10. Dorigo M, Birattari M, Stutzle T (2006) Ant colony optimization—artificial ants as a computational intelligence technique. IEEE Comput Intell Mag 1:28–39
11. Du H, Xiaodong, W, Jian Z (2006) Small-world optimization algorithm for function optimization. In: International conference on natural computation, Springer, Berlin
12. Erol OK, Eksin I (2006) A new optimization method: big bang–big crunch. Adv Eng Softw 37(2):106–111
13. Eskandar H, Sadollah A, Bahreininejad A, Hamdi M (2012) Water cycle algorithm–A novel metaheuristic optimization method for solving constrained engineering optimization problems. Comput Struct 110:151–166
14. Formato RA (2009) Central force optimization: a new deterministic gradient-like optimization metaheuristic. Opsearch 46(1):25–51
15. Gandomi AH, Kashani AR (2018) Construction cost minimization of shallow foundation using recent swarm intelligence techniques. IEEE T Ind Inform 14(3):1099–1106
16. Gentle JE (2003) Random number generation and Monte Carlo methods. Springer, Berlin
17. Giraud-Moreau L, Lafon P (2002) A comparison of evolutionary algorithms for mechanical design components. Engineering Optimization 34(3):307–322
18. Gu L, Yang RJ, Tho CH, Makowskit M, Faruquet O, Y-Li YL (2001) Optimisation and robustness for crashworthiness of side impact. Int J Veh Des 26(4):348–360
19. Gupta S, Tiwari R, Nair SB (2007) Multi-objective design optimisation of rolling bearings using genetic algorithms. Mech Mach Theory 42(10):1418–1443
20. Hamza F, Abderazek H, Lakhdar S, Ferhat D, Yildiz AR (2018) Optimum design of cam-roller follower mechanism using a new evolutionary algorithm. Int J Adv Manuf Technol 99(5–8):1267–1282
21. Hatamlou A (2013) Black hole: a new heuristic optimization approach for data clustering. Inf Sci 222:175–184
22. Ho-Huu V, Nguyen-Thoi T, Nguyen-Thoi MH, Le-Anh L (2015) An improved constrained differential evolution using discrete variables (D-ICDE) for layout optimization of truss structures. Expert Syst Appl 42(20):7057–7069
23. Ho-Huu V, Nguyen-Thoi T, Truong-Khac T, Le-Anh L, Vo-Duy T (2016) An improved differential evolution based on roulette wheel selection for shape and size optimization of truss structures with frequency constraints. Neural Comput Appl 29(1):167–185
24. Holland JH (1975) Adaptation in natural and artificial systems. University of Michigan Press, Ann Arbor
25. Karaboga D, Basturk B (2007) A powerful and efficient algorithm for numerical function optimization: artificial bee colony (ABC) algorithm. J Glob Optim 39(3):459–471
26. Karagöz S, Yildiz AR (2017) A comparison of recent metaheuristic algorithms for crashworthiness optimization of vehicle thin-walled tubes considering sheet metal forming effects. Int J Veh Des 73(1–3):179–188
27. Kaveh A, Khayatazad M (2012) A new meta-heuristic method: ray optimization. Comput Struct 112:283–294
28. Kaveh A, Mahdavi VR (2014) Colliding bodies optimization: a novel meta-heuristic method. Comput Struct 139:18–27
29. Kaveh A, Talatahari S (2010) A novel heuristic optimization method: charged system search. Acta Mech 213(3–4):267–289
30. Kennedy J, Eberhart RC (1995) Particle swarm optimization. In: Proceedings of IEEE international conference on neural networks, pp 1942–1948
31. Kiani M, Yildiz AR (2016) A comparative study of non-traditional methods for vehicle crashworthiness and NVH optimization. Arch Comput Methods Eng 23(4):723–734
32. Kirkpatrick S, Gelatt CD, Vecchi MP (1983) Optimization by simulated annealing. Science 220(4598):671–680
33. Koza JR (1992) Genetic programming II, automatic discovery of reusable subprograms. MIT Press, Cambridge
34. Mirjalili S (2015) Moth-flame optimization algorithm: a novel nature-inspired heuristic paradigm. Knowl Based Syst 89:228–249
35. Mirjalili S (2015) The ant lion optimizer. Adv Eng Softw 83:80–98
36. Mirjalili S (2016) Dragonfly algorithm: a new meta-heuristic optimization technique for solving single-objective, discrete, and multi-objective problems. Neural Comput Appl 27(4):1053–1073
37. Mirjalili S, Gandomi AH, Mirjalili SZ, Saremi S, Faris H, Mirjalili SM (2017) Salp Swarm Algorithm: A bio-inspired optimizer for engineering design problems. Adv Eng Softw 114:163–191
38. Mirjalili S, Lewis A (2016) The whale optimization algorithm. Adv Eng Softw 95:51–67
39. Mirjalili S, Mirjalili SM, Lewis A (2014) Grey wolf optimizer. Adv Eng Softw 69:46–61
40. Moghaddam FF, Moghaddam RF, Cheriet M (2012) Curved space optimization: a random search based on general relativity theory. arXiv, preprint arXiv:1208
41. Oftadeh R, Mahjoob M, Shariatpanahi MA (2010) Novel metaheuristic optimisation algorithm inspired by group hunting of animals: hunting search. Comput Math Appl 60(7):2087–2098
42. Pholdee N, Bureerat S, Yildiz AR (2017) Hybrid real-code population-based incremental learning and differential evolution for many-objective optimisation of an automotive floor-frame. Int J Veh Des 73(1–3):20–53
43. Qing A (2009) Differential evolution: fundamentals and applications in electrical engineering. Wiley, New York
44. Rao RV, Savsani VJ, Vakharia DP (2011) Teaching-learning-based optimization: a novel method for constrained mechanical design optimization problems. Comput Aided Des 43:303–315
45. Rashedi E, Nezamabadi-Pour H, Saryazdi S (2009) GSA: a gravitational search algorithm. Inf Sci 179(13):2232–2248
46. Saravanan R (2006) Manufacturing optimization through intelligent techniques. CRC Press, Boca Raton
47. Shah-Hosseini H (2011) Principal components analysis by the galaxy-based search algorithm: a novel metaheuristic for continuous optimisation. Int J Comput Sci Eng 6(1–2):132–140
48. Sadollah A, Bahreininejad A, Eskandar H, Hamdi M (2012) Mine blast algorithm for optimization of truss structures with discrete variables. Comput Struct 102:49–63
49. Sadollah A, Bahreininejad A, Eskandar H, Hamdi M (2013) Mine blast algorithm: A new population based algorithm for solving constrained engineering optimization problems. Appl Soft Comput 13(5):2592–2612
50. Sadollah A, Eskandar H, Bahreininejad A, Kim JH (2015) Water cycle algorithm with evaporation rate for solving constrained and unconstrained optimization problems. Appl Soft Comput 30:58–71
51. Sadollah A, Eskandar H, Bahreininejad A, Kim JH (2015) Water cycle, mine blast and improved mine blast algorithms for discrete sizing optimization of truss structures. Comput Struct 149:1–16
52. Sandgren E (1990) Nonlinear integer and discrete programming in mechanical design optimization. ASME J Mech Des 112:223–229

53. Shiqin Y, Jianjun J, Guangxing Y (2009) A dolphin partner optimization. In: Global congress on intelligent systems. IEEE, pp 124–128
54. Simon D (2008) Biogeography-based optimization. IEEE Trans Evolut Comput 12(6):702–713
55. Storn R, Price K (1995) Differential evolution—a simple and efficient adaptive scheme for global optimization over continuous spaces. Technical Report TR-95-012, ICSI
56. Takahama T, Sakai S (2010) Efficient constrained optimization by the epsilon constrained adaptive differential evolution. In: Proceedings of 2010 IEEE congress on evolutionary computation (CEC2010)
57. Yang X-S, Deb S. (2009) Cuckoo search via levy flights. In: Proceedings of the world congress on nature and biologically inspired computing (NaBIC-2009), Coimbatore, India, pp 210–214
58. Yang C, Tu X, Chen J (2007) Algorithm of marriage in honey bees optimization based on the wolf pack search. In: IEEE 2007 international conference on intelligent pervasive computing (IPC), pp 462–467
59. Yang XS (2010) A new metaheuristic bat-inspired algorithm. In: Nature inspired cooperative strategies for optimization (NICSO 2010). Springer, Berlin, pp 65–74
60. Yildiz AR (2012) A new hybrid particle swarm optimization approach for structural design optimization in the automotive industry. Proc Inst Mech Eng Part D J Automob Eng 226(10):1340–1351
61. Yildiz AR (2013) A new hybrid differential evolution algorithm for the selection of optimal machining parameters in milling operations. Appl Soft Comput 13(3):1561–1566
62. Yildiz AR (2013) Comparison of evolutionary-based optimization algorithms for structural design optimization. Eng Appl Artif Intell 26(1):327–333
63. Yildiz AR (2013) Cuckoo search algorithm for the selection of optimal machining parameters in milling operations. Int J Adv Manuf Technol 64(1-4):55–61
64. Yildiz AR (2013) Hybrid Taguchi-differential evolution algorithm for optimization of multi-pass turning operations. Appl Soft Comput 13(3):1433–1439
65. Yildiz AR, Saitou K (2011) Topology synthesis of multi component structural assemblies in continuum domains. J Mech Des 133(1):011008
66. Yildiz BS (2017) A comparative investigation of eight recent population-based optimisation algorithms for mechanical and structural design problems. Int J Veh Des 73(1-3):208–218
67. Yildiz BS, Yildiz AR (2017) Moth-flame optimization algorithm to determine optimal machining parameters in manufacturing processes. Mater Test 59(5):425–429

Publisher's Note Springer Nature remains neutral with regard to jurisdictional claims in published maps and institutional affiliations.

View publication stats